MFG Part #	Product Description	Post Height	Post Size	Beam Size	Weight	Fastening Requirements	
						Type & Size	Total Per Anchor
RAS-675-4	MS ROOF ANCHOR - DOUBLE TRUSS EWP EACH SIDE. ROOF ANCHOR IS 6 3/4" WIDE	4' - 0"	2" x 2" x 1/4"	6 3/4"	50#	SDS Screw - 1/4" x 3"	20
RAL-675-8		8' - 0"	3" x 3" x 3/8"	6 3/4"	135#	SDS Screw - 1/4" x 3"	40

Maximum Allowable loading of MS Roof Anchor		
	RAS-675-4	RAL-675-8
Available Strength in Shear P (ASD)	6650 lb	13324 lb
Available Strength in Bending M (ASD)	1939 lb-ft	6107 lb-ft

NOTE:

1. POSTS MAY BE CUT TO A LOWER HEIGHT TO MATCH THE SCREEN HEIGHT
2. SCREEN HEIGHT MUST NOT EXCEED POST HEIGHT
3. ALL FRAMING, BLOCKING, AND STRAPPING ARE TO BE DESIGNED BY THE ENGINEER OF RECORD.
4. CUSTOM POST HEIGHTS AND DESIGNS AVAILABLE UPON REQUEST.

Recommended Details

All framing, blocking, strapping are to be designed by the engineer of record.

CUSTOM POST HEIGHTS AND DESIGNS AVAILABLE UPON REQUEST.

PATENT PENDING

IAPMO ER# PENDING
2020 L.A. CITY BUILDING CODE
MS ROOF ANCHORS ARE MANUFACTURED BY TOBIN STEEL
(LA CITY FABRICATORS LICENSE #975)

RAS-675-4

POST:

SHAPE:	SQUARE HSS
SECTION:	HSS 2 x 2x 1/4
POST HEIGHT:	4.00 ft

SCREEN HEIGHT CAN BE LOWER THAN POST HEIGHT
SCREEN HEIGHT SHALL NOT BE HEIGHER THAN THE POST HEIGHT
POST CAN BE CUT ON-SITE TO A LOWER HEIGHT TO MATCH THE SCREEN HEIGHT

WOOD STRUCTURE MEMBER BY OTHERS:

NOMINAL SIZE:	DOUBLE TRUSS
MEMBER WIDTH:	6.625 in
MINIMUM MEMBER DEPTH:	7.5 in

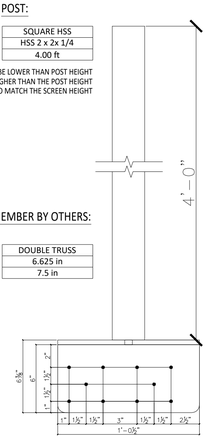

1 ANCHOR DETAIL

RAL-675-8

POST:

SHAPE:	SQUARE HSS
SECTION:	HSS 3 x 3 x 3/8
POST HEIGHT:	8.00 ft

SCREEN HEIGHT CAN BE LOWER THAN POST HEIGHT
SCREEN HEIGHT SHALL NOT BE HEIGHER THAN THE POST HEIGHT
POST CAN BE CUT ON-SITE TO A LOWER HEIGHT TO MATCH THE SCREEN HEIGHT

WOOD STRUCTURE MEMBER BY OTHERS:

NOMINAL SIZE:	DOUBLE TRUSS
MEMBER WIDTH:	6.625 in
MINIMUM MEMBER DEPTH:	9.25 in

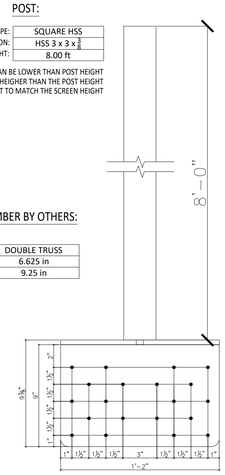

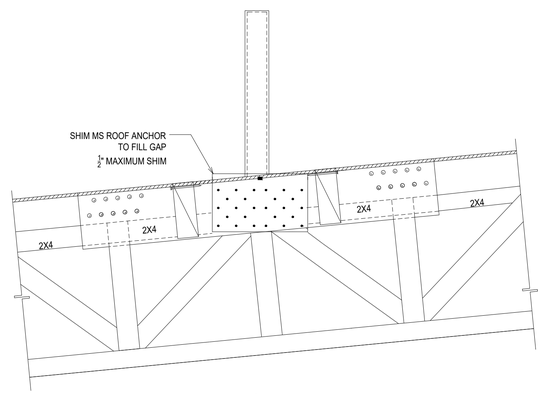

MS ROOF ANCHORS MAY BE PLUMB UP TO ½" PER FOOT ON SLOPED BEAMS AND TRUSSES

2 SLOPED DETAIL

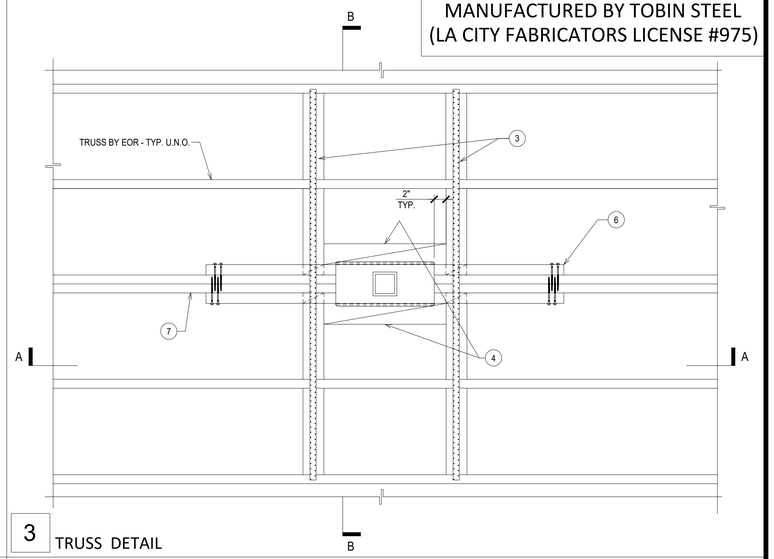

3 TRUSS DETAIL

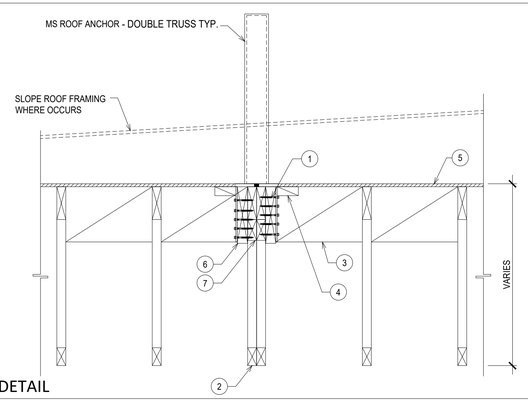

4 TRUSS DETAIL

KEYNOTES LEGEND

1. SDS 1/4"x3" PER SCHEDULE.
2. STRUCTURAL SUPPORT DBL TRUSS BY EOR, 2 PLY MIN.
3. BLK'G w/ STRAP PER EOR.
4. 2x4 FLAT BLK'G TIGHT AGAINST SADDLE
5. ROOF SHEATHING PER EOR
6. 1 3/4x ENGINEERED BEAM ATTACHED TO DBL TRUSS PER EOR - CENTERED TO ROOF ANCHOR
7. 2X6 TOP CORDS WITH 2X4 BELOW FULL LENGTH OF EWP

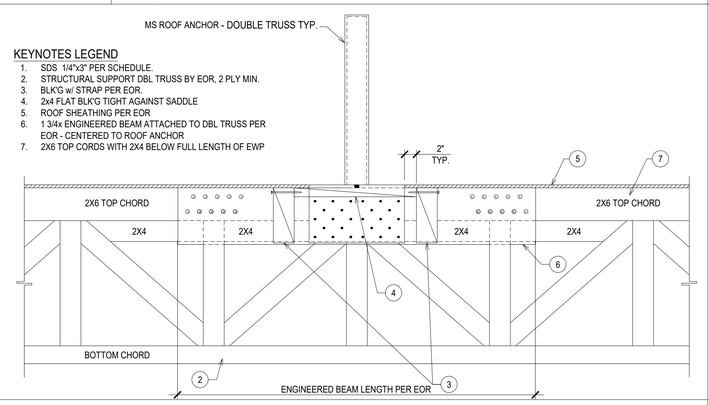

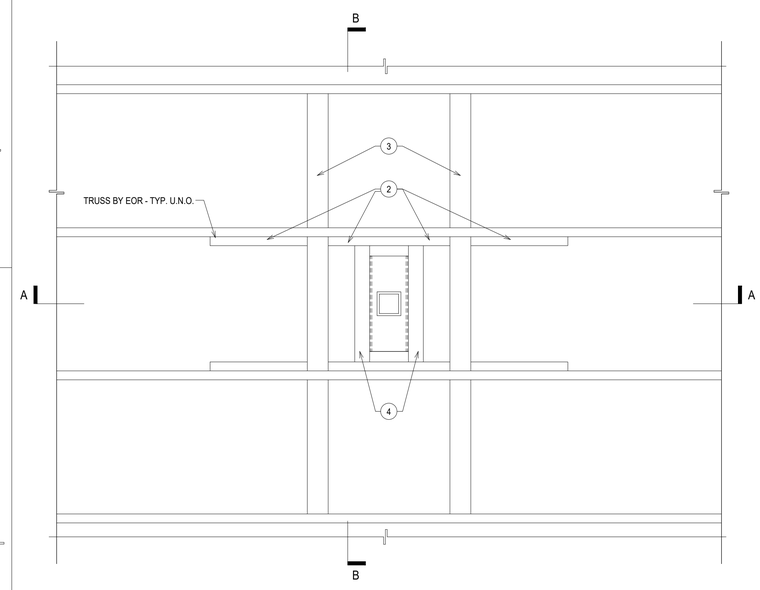

6 BLOCKING DETAIL

PLAN VIEW

USE RAS-35-4 & RAL-55-8 FOR BLOCKING BETWEEN TRUSSES

SECTION B-B

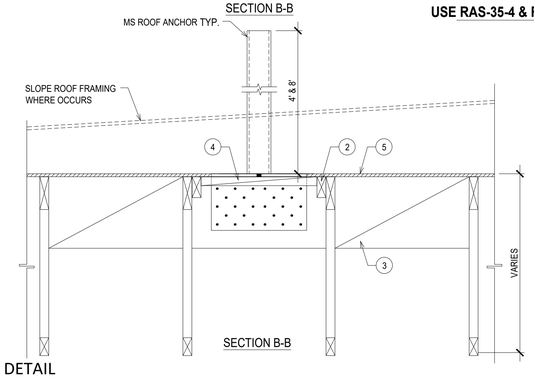

SECTION B-B

5 BEAM DETAIL

KEYNOTES LEGEND

1. SDS 1/4" x 2" PER SCHEDULE
2. 2X BLK'G BY EOR
3. BLK'G & STRAP BY EOR
4. 2x4 FLAT BLK'G TIGHT AGAINST SADDLE
5. ROOF SHEATHING PER EOR

SECTION A-A

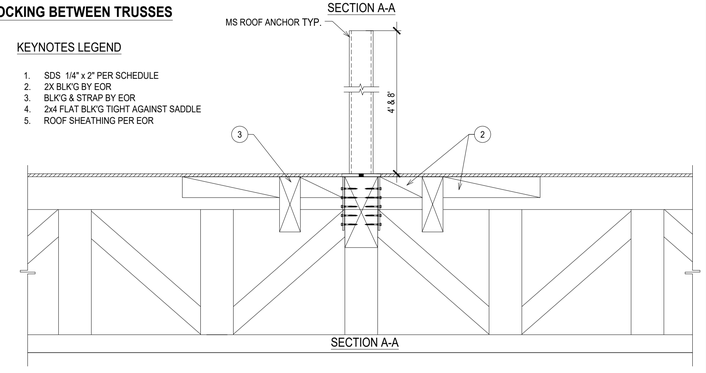

SECTION A-A

MS ROOF ANCHOR
TRUSS DETAIL SHEET

Mark Scambray
mark@msroofanchor.com
(949) 636-1255
www.msroofanchor.com

DATE: May 23rd 2024

SCALE: N.T.S.

SHEET #: T-0